en

With your furniture you have purchased a convenient electromechanically assisted opening system for refrigerators. Familiarise yourself with the system's components and please follow the technical advice:

General information

The following safety instructions must be adhered to:

- Carefully read the operating instructions before putting the system into operation.
- Keep the operating instructions for the entire service life of the system.
- Pass these operating instructions on to any subsequent user or owner of the Easys.

1.Intended use

This machine must only be installed in refrigerators, freezers or combined refrigerators/freezers with a maximum overall height of 178cm and overall width of 60cm.

The structure of the built in cabinet and refrigerator must be designed in such a way that a force of up to 300N acting on the door leaf from the inside will not result in any detachment of the door leaf or the refrigerator door during continuous operation (300,000 cycles). The force necessary to open the doors must not exceed 120N.

The Easys element must be housed between two panels, panel made of chipboard or MDF, in a panel thickness of 10 to 22mm. At least one of the two panels must be set at a distance from other furniture parts to permit any necessary ventilation.

The ventilation drill hole in the rear panel must be at least 15 mm in diameter (see Fig. 13 on page 126).

For further information on use: refer to the installation instructions starting on page 123.

2.1 Safety precautions

- Assembly, servicing and dismantling work as well as starting up the system and selecting settings may only be performed by a kitchen furniture installer.
- Easys may be used by children aged 8 or above and by persons with reduced sensory or mental capabilities or lack of experience and knowledge if they are supervised or have been given instructions on how to use the system safely and understand the hazards involved.
- Do not allow children to play with Easys. Children are not allowed to clean, use or carry out maintenance work on the system without supervision.
- Prior to any cleaning or servicing work, switch off the socket outlet or disconnect the mains power plug.
- The penetration of moisture into the power supply unit presents a danger to life from electric shock.
- Only use the power supply unit for connecting devices included with the electromechanically assisted opening system, or devices specifically intended by the manufacturer for simultaneous connection to the power supply unit.
- If the power supply unit's power cable is damaged, it must not be used and must be replaced. This presents a danger to life from electric shock.
- Never open a faulty power supply unit or a faulty drive (danger to life).
- Persons with pacemakers/defibrillators are advised to switch off and completely isolate the power supply when they are in the immediate vicinity of the power supply unit.
- The system meets the regulations applicable at the time it was released onto the market. Other electrical devices may nevertheless interfere with the system operation. If this occurs, contact the manufacturer or retailer of the devices concerned.
- Cabinet doors that are to be operated by the Easys 200 must run smoothly. Avoid any overloading or obstructing of the cabinet doors through objects that are too heavy or bulky.
- To prevent the unintentional operation of the door, it is recommended to connect the power supply unit to a switchable socket outlet and switch this off as required.
- For installation purposes, it must be possible to switch off the mains power supply unit. This can be done by providing a readily accessible power socket for unplugging the system or by installing a switch in the wiring in compliance with applicable wiring installation regulations (see Figure 23 on page 128).

2.2 Structural Modifications and Replacement Parts

Do not make any structural modifications and do not use any parts that have not been approved by the manufacturer, as these will impair function and safety.

- Only use genuine replacement parts.
- This also applies to the use of the power supply unit.

Only use the power supply unit provided or an identical substitute power supply unit supplied by Hettich.

- UKCA conformity will no longer apply if non-genuine replacement parts are used.
- Components may only be replaced by a properly trained person.
- Have any damages repaired immediately by a qualified, skilled person.
- Order replacement parts from your dealer or furniture supplier.

2.3 Disposal

Dispose of your end of life appliance in accordance with national / international regulations.

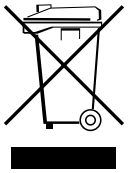

2.4 Marking and technical specifications

Power supply unit: ICP36-240-1500

1. 100...240 V 50/60 Hz = supply voltage
2. 24 V DC SELV = output voltage (safety extra low voltage)
3. 36 W = rated power
4. = protection class II (protective insulation)
5. = protection class III
   Easys automatic drive and feed mechanism
6. 1.5 V = power consumption at maximum load
7. Average operating efficiency: ≥ 87.5%
   Efficiency at low load (10%) ≥ 83%
   Power consumption at low load ≤ 0.1W"

The A-rated emission sound pressure level at workstations does not exceed 70 dB(A).

2.5 Commissioning

Commissioning, assembly/installation and servicing work must only be carried out by trained, specialist personnel. Zero-maintenance.

2.6 Potential misuse

This machine must only be operated if it is in proper technical working order. In the event of faults in the power supply and/or damage to the electrical equipment, the machine must be immediately disconnected from the power supply. Any identified faults and damages must be immediately rectified.

The machine must not be modified or otherwise changed in any way without prior consultation with Hettich or the type approval and UKCA Declaration of Conformity will become null and void.

Safety components must not be rendered ineffective.

UKCA Declaration of Conformity

Manufacturer's name and address	Hettich-ONI GmbH & Co. KG Industriestraße 11-13 32602 Vlotho Germany
Object of the declaration:	Built-in motor
Type designation:	EASY 200Drive unit for cabinet doors use with power supply: ICP-36-240-1500

The object of the declaration described above is in conformity with the relevant UK-Regulations and UK-Guidelines:

The Supply of Machinery (Safety) Regulations 2008
STATUTORY INSTRUMENTS
2008 No. 1597

HEALTH AND SAFETY

The Electromagnetic Compatibility Regulations 2016
STATUTORY INSTRUMENTS
2016 No. 1091

ELECTROMAGNETIC COMPATIBILITY

The Restriction of the use of Certain Hazardous Substances in Electrical and Electronic Equipment Regulations 2012
STATUTORY INSTRUMENTS
2012 No. 3032

ENVIRONMENTAL PROTECTION

The Ecodesign for Energy-Related Products Regulations 2010'
STATUTORY INSTRUMENTS
2010 No. 2617

ENERGY CONSERVATION

References of standards and/or technical specifications applied for this declaration of conformity, or parts thereof:

2008 No. 1597:	**EN 60335-1:2012** **EN 60335-1:2012/AC:2014** **EN 60335-1:2012/A11:2014** **EN 60335-1:2012/A13:2017** **EN 60335-1:2012/A1:2019** **EN 60335-1:2012/A2:2019** **EN 60335-1:2012/A14:2019** **EN 60335-1:2012/A15:2021** **EN 62233:2008** **EN 62233 Ber.1:2008**
2016 No. 1091:	**EN IEC 55014-1:2021** **EN IEC 55014-2:2021** **EN IEC 61000-3-2:2019** **EN IEC 61000-3-2:2019/A1:2021** **EN 61000-3-3:2013** **EN 61000-3-3:2013/A1:2019**
2012 No. 3032:	**EN IEC 63000:2018**
2010 No. 2617:	**EN 50564:2011** **Commission Regulation (EC) No. 2019/1782**

This declaration is issued under the sole responsibility of the manufacturer.

Vlotho, 01.02.2023

(Place, Datum)

marked Jürgen Werner

(Name, Function) (Signature)

3. Description

3.1 Components

1 Easys

2 Power supply unit

3 Power cable

4 Counterplate

5 Tolerance plates

6 Screws

7 Mounting templates

8 Operating instructions

Function

Easys is an electromechanically assisted opening system for refrigerators fitted in a carcase.

The function unit is provided with a sensor that responds to a press on the door. This is then pushed open for 2,5 - 8 seconds so that it can then be opened all the way by hand.

The unit is only activated by a defined pressure, to avoid inadvertent operation.

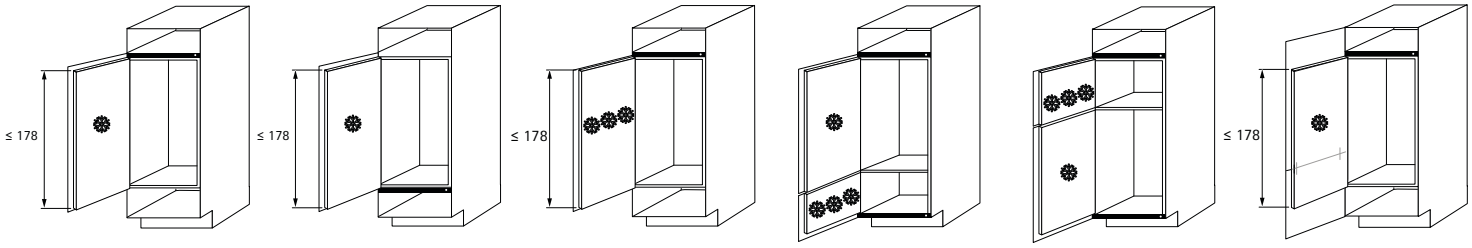

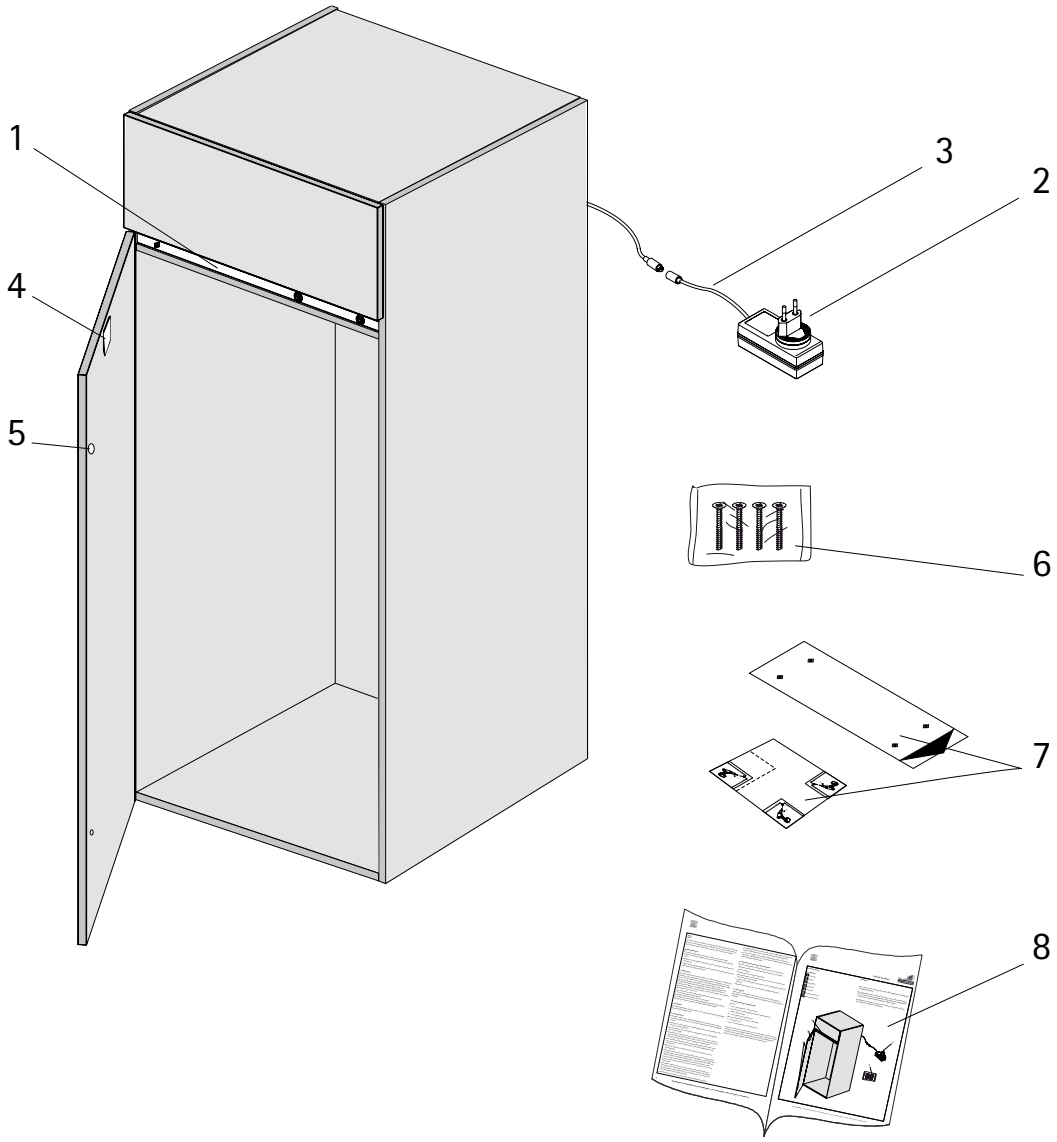

4. Operation

The Easys opens refrigerator doors automatically through a pushing motion on the door.

- Once you have connected the system to the electricity supply, close the refrigerator door.
- Wait for six seconds until an acoustic signal sounds twice.
- Pressing on the door it opens for 2,5 - 8 seconds.
- Open the refrigerator door fully by reaching behind with your hand.
- The refrigerator door should not be closed until at least 2,5 - 8 sec after the opening process. The door must always be closed by hand.
- Do not close the refrigerator door with excessive force.

5. Malfunctions and possible causes

Malfunction		Cause	Remedy
Refrigerator door does not open		Duration of pressure on the refrigerator door too short	Increase duration of pressure
		Duration of pressure on the refrigerator door too long	Reduce duration of pressure
		Hardly any give when pressing, stroke to small (tolerance plates not installed?)	Check tolerance plates, install if necessary
		Door opening to small	Install tolerance plates
		An object is obstructing the refrigerator door	Remove object
		No power at socket outlet	Check fuse / switchable socket outlet. If necessary, consult a qualified electrician
		Power supply unit faulty	Contact Customer Service
		System is being operated too quickly in succession	Wait between actions approx. two seconds
		Trigger pressure applied to the refrigerator door is too low	Increase trigger pressure against the refrigerator door
Easys beeps:	3x (beep beep beep)	Short term power outage during the opening process	Once the power outage has been remedied, the Easys works again (2x beep)
	2x, pause, 2x, pause, 2x (beep beep ----- beep beep ----- beep beep)	Refrigerator door overload detected:	
		An object is obstructing the refrigerator door	Remove object
		Low pressure in the refrigerator	Wait approx. two minutes, then a beep sounds twice, Easys is working again
	5x (beep beep beep beep beep)	Motor protection is active, due to multiple overload of the motor	Wait approx. two minutes, then a beep sounds twice, Easys is working again
	X times (continuous beeping) (beep ---- beep ---- beep ---- beep ---- beep ---- beep...)	Communication disturbance within the Easys	Contact Customer Service
Refrigerator door does not close		Push-out rod is not in the home position	Wait with open door for 2,5 - 8 seconds.
		Push-out rod is in the extended position, due to long continual power outage	Remove the push-out rod: • Turn the push-out rod 1/4 turn clockwise and pull it out • Close the refrigerator door (ensure that renewed opening of the refrigerator door is possible) • Once the power supply has been reestablished, open the refrigerator door by hand • Within the time the door is open, insert the push-out rod as far as possible into the opening • Close the refrigerator door • Apply pressure to the refrigerator door • Within the time the door is open, tighten the push-out rod by turning it anticlockwise through 90 degrees
Refrigerator door does not open (noises audible)		Push-out rod missing (because previously removed)	Install the push-out rod
During start-up, no acoustic signal audible (2x beep)		No operating voltage present	Instruct a qualified electrician to check fuse / switchable socket outlet
		Power supply unit faulty	Contact Customer Service
		Plug connector between power supply unit and Easys incorrect	Correct plug in connector
		Refrigerator door is not closed	Close the refrigerator door and wait approx. six seconds