Folding door fitting Wing Line 770 for 1 folding door with 2 panels Function/Assembly

2-panel door set

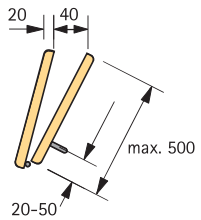

2-panel folding door

Panel width max. 1000 mm
Door weight/panel max. 20 kg
Door panel height max. 2200 mm

Recommended door panel contours for reducing risk of crushing

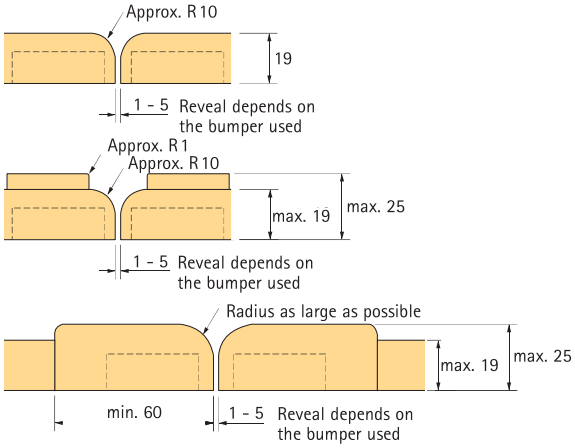

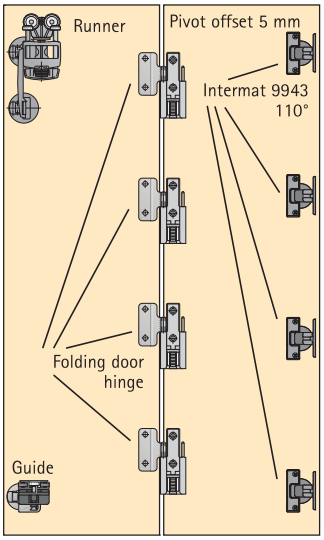

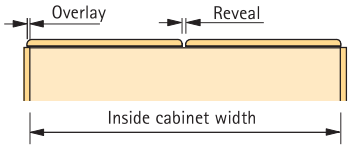

Calculation of door width/door panels

Door width = inside cabinet width + (2 x overlay*)
Door panel width = inside cabinet width – (1 x reveal) + (2 x overlay*) ÷ 2

* Overlay: max. 15 mm, C value 5 mm

Drilling pattern

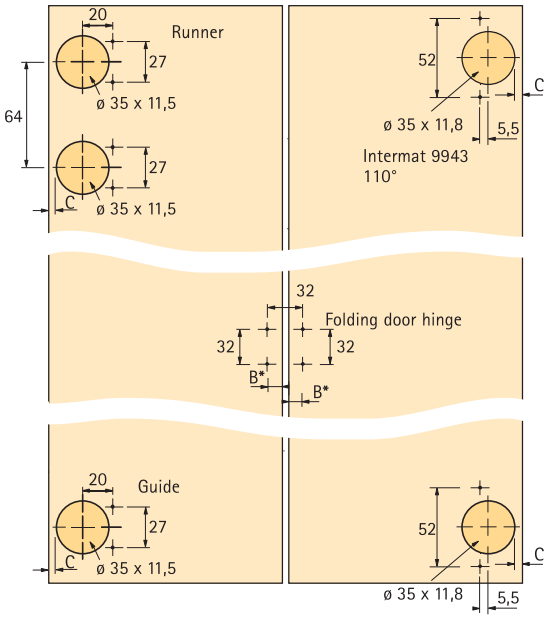

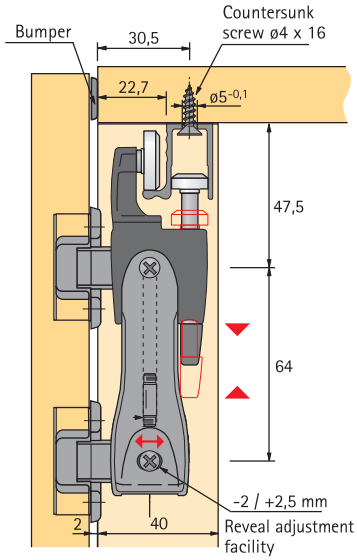

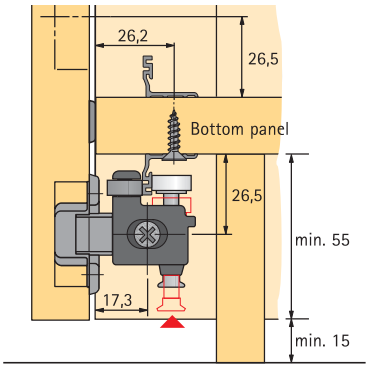

* B Hole spacing mm	13,5	14	14,5	15	15,5
Reveal mm	5	4	3	2	1

Folding door fitting Wing Line 770
for 1 folding door with 2 panels
Assembly

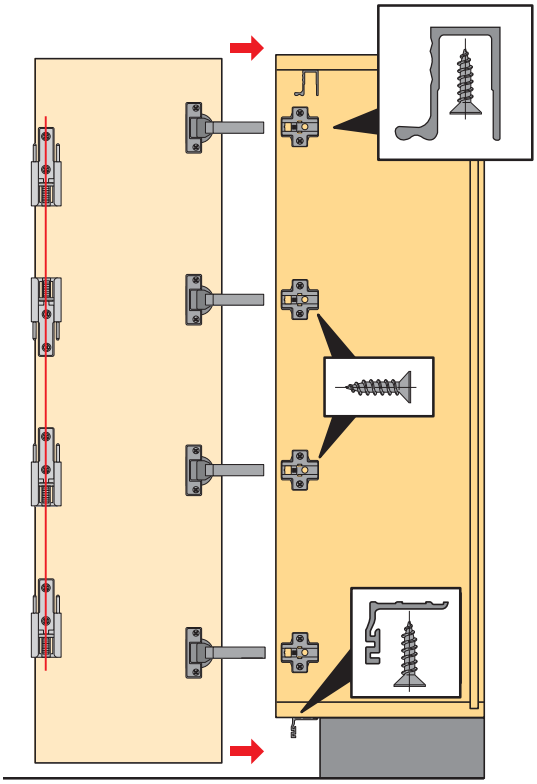

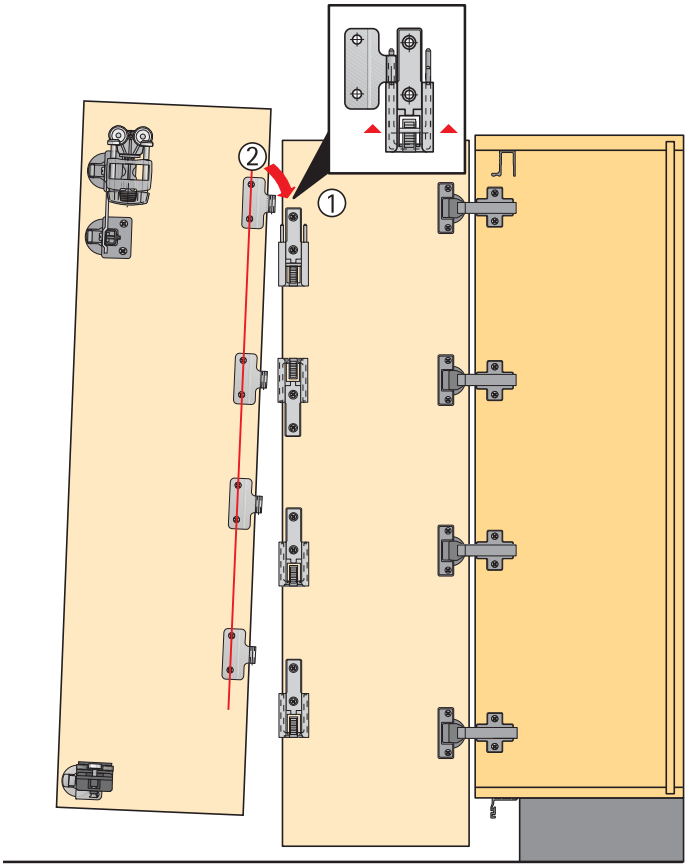

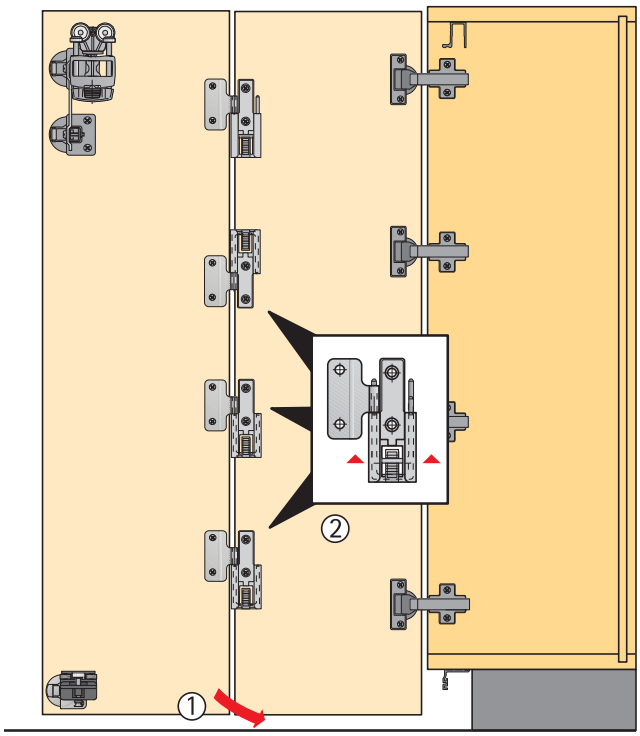

Assembly runner profile

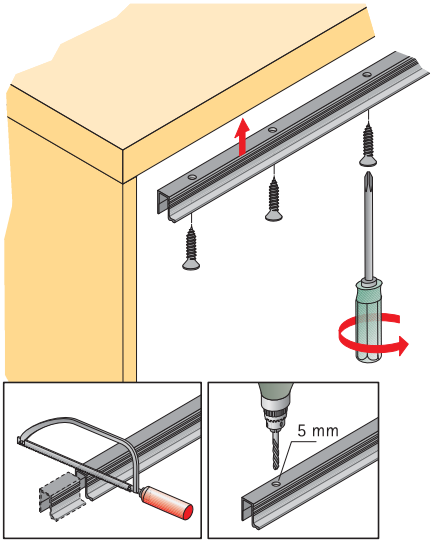

Preparing the door set

1

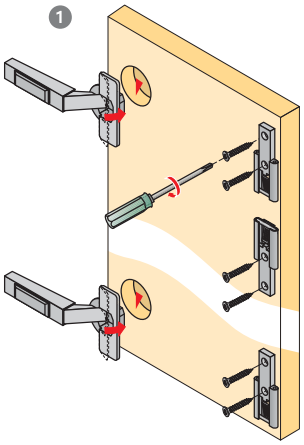

2

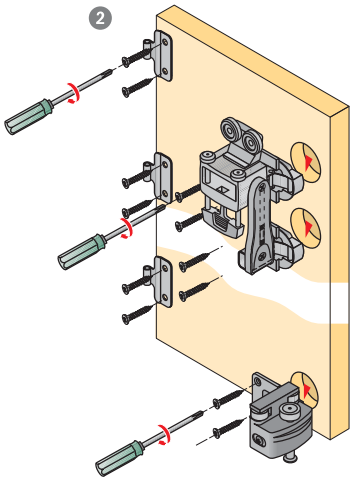

Mounting the door set

1

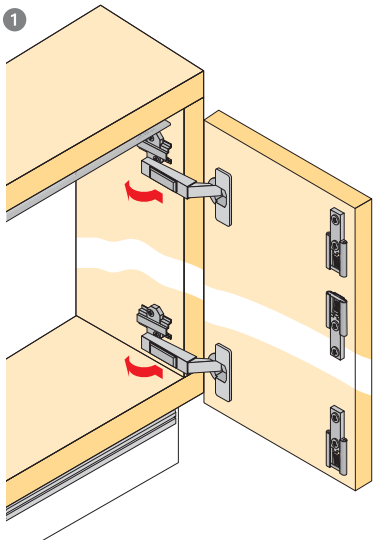

2

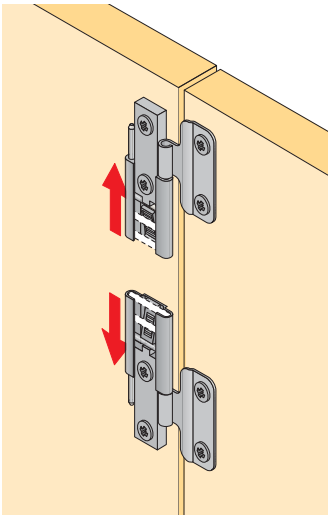

3

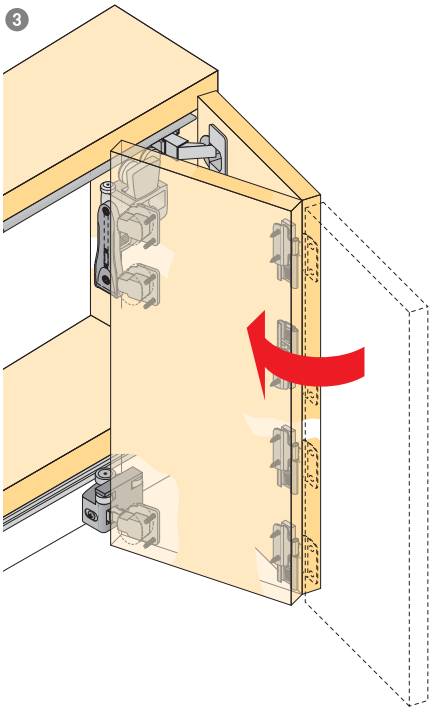
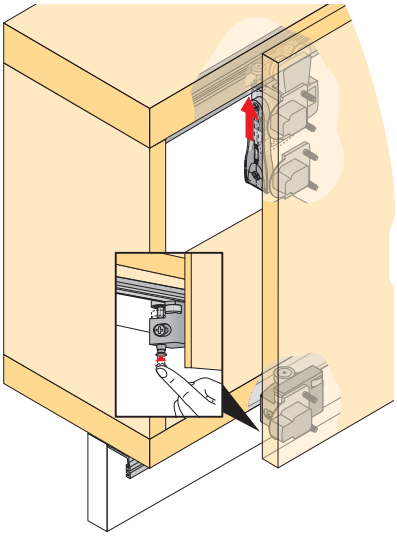
4